| MALE END VIEW | FEMALE END VIEW |
|---|---|

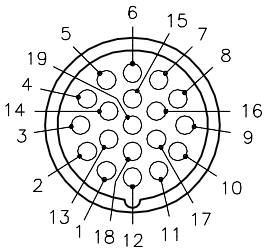


M23 connector

1 = VIOLET
2 = RED
3 = GRAY
4 = RED/BLUE
5 = GREEN
6 = BLUE
7 = GRAY/PINK
8 = WHITE/GREEN
9 = WHITE/YELLOW
10 = WHITE/GRAY
11 = BLACK
12 = GREEN/YELLOW
13 = YELLOW/BROWN
14 = BROWN/GREEN
15 = WHITE
16 = YELLOW
17 = PINK
18 = GRAY/BROWN
19 = BROWN

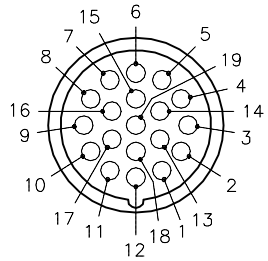


M23 connector

## SPECIFICATIONS

| | |
|---|---|
| CONTACT CARRIER MATERIAL | NYLON or PBT |
| MOLDED HEAD MATERIAL/COLOR | TPU/BLACK |
| CONTACT MATERIAL/PLATING | BRASS/GOLD |
| COUPLING NUT MATERIAL/PLATING | BRASS/NICKEL |
| RATED CURRENT [A] | 9.0 A (PINS 6,19), 2.0 A (ALL OTHER PINS) |
| RATED VOLTAGE [V] | 150 V |
| OUTER JACKET MATERIAL/COLOR | TPU/YELLOW |
| CONDUCTOR INSULATION MATERIAL | PVC |
| NUMBER OF CONDUCTORS [AWG] | 3x18 AWG, 16x22 AWG |
| DRAIN/SHIELD | 20 AWG/ALUM.-POLYESTER FOIL |
| TEMPERATURE RANGE | -40°C to +90°C (-40°F to +194°F) |
| PROTECTION CLASS | IEC IP67 |

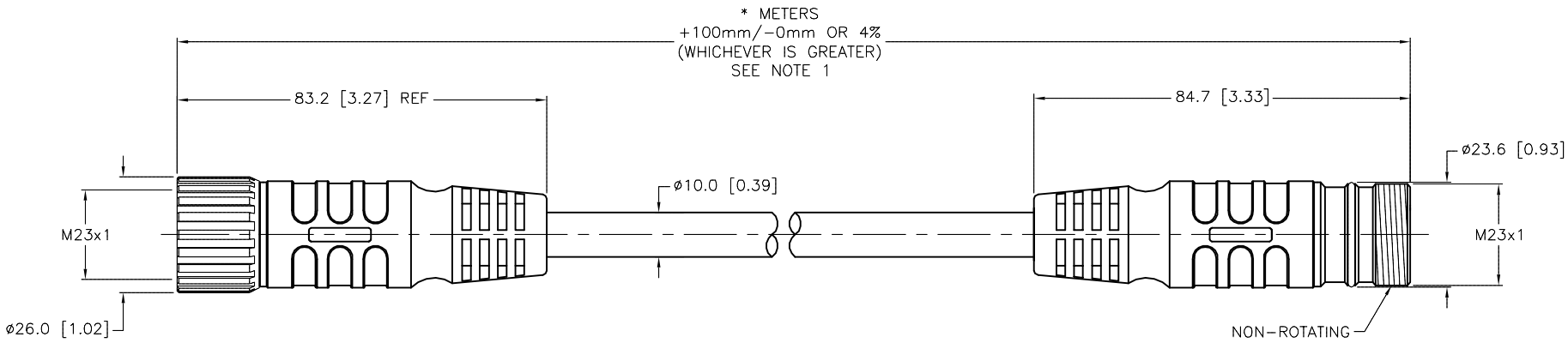


**SOURCE DRAWING - FOR REFERENCE ONLY**

NOTES:

1. "*" INDICATES CABLE LENGTH IN METERS. CONTACT TURCK TO ORDER SPECIFIC LENGTHS.

2. "/S90" DESIGNATES THERMOPLASTIC POLYURTHANE (TPU) CABLE JACKET.

| REV | DESCRIPTION | BY | DATE | ECO NO. |
|---|---|---|---|---|
| A | DRAWING RELEASE | TV | 07/22/15 | |

RELATED DOCUMENTS
1.
2.
3.
4.

3RD ANGLE PROJECTION

THIS DRAWING IS CONFIDENTIAL AND THE PROPERTY OF TURCK INC. USE OF THIS DOCUMENT WITHOUT WRITTEN PERMISSION IS PROHIBITED.

TURCK INC
High Technology Sensors and Automation Controls
3000 CAMPUS DRIVE
MINNEAPOLIS, MN 55441
1-800-544-7769
(763) 553-7300
(763) 553-0708 fax
turck.com

MATERIAL

FINISH

ALL DIMENSIONS DISPLAYED ON THIS DRAWING ARE FOR REFERENCE ONLY

CONTACT TURCK FOR MORE INFORMATION

DRFT TV | DATE 07/20/15
APVD L.H. | SCALE 1=1.5

UNIT OF MEASUREMENT
**MILLIMETER [ INCH ]**
DO NOT SCALE THIS DRAWING

DESCRIPTION
CSM CXM 19-19-*/S90

IDENTIFICATION NO.

REV A

FILE: 777035780

SHEET 1 OF 1

Approved 07/20/2015, work order #82557 by L.H.